PL STRINGER SIZES

1-13 TREADS = PL1/4X12
14-17 TREADS = PL5/16X12
18-24 TREADS = PL3/8X12

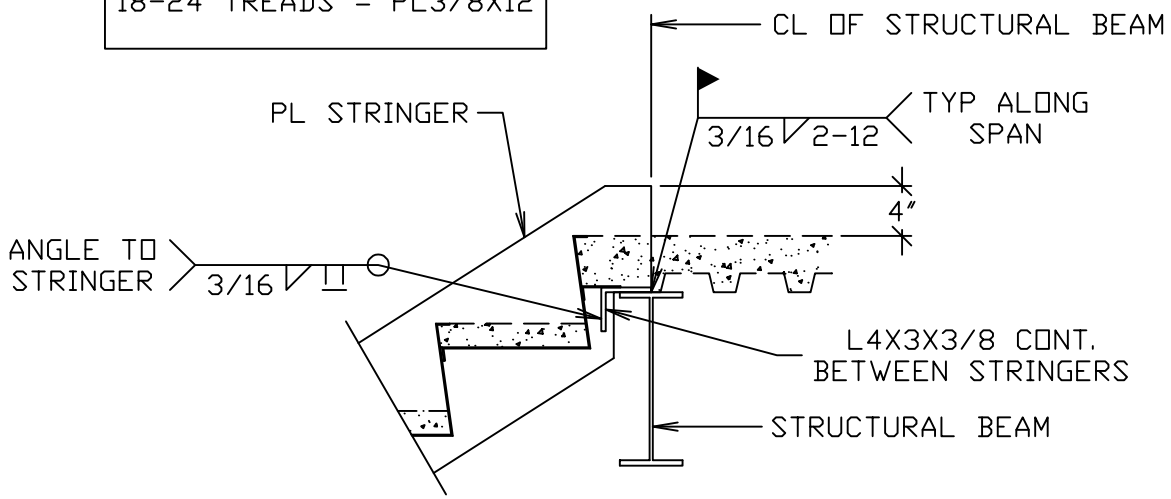

STANDARD STRINGER CONNECTION AT TOP TO STRUCTURAL BEAM

E 01

SCALE: 1" = 1'-0"

GENERAL NOTES	REVISIONS		
	REV.	DATE	DESCRIPTION
STEEL: A36 HSS: A500-Gr.C			
ELECTRODES: E70C-6M or E70-LH			
WELD FINISH: STD. TYPE 2 NOMMA			
	A	7-7-21	Preliminary

BACK CHARGES WILL NOT BE HONORED WITHOUT PRIOR AUTHORIZATION

TrueNorth Steel
TrueNorthSteel.com

MANDAN MISCELLANEOUS METALS
2522 MEMORIAL HIGHWAY MANDAN, ND
PHONE 701.663.0321 FAX 701.663.1724

CHECKED BY: X	DRAWN BY: MJW	JOB NUMBER	
	SCALE: AS NOTED	–	
PROJECT: TrueStair Standard Details –		DRAWING NO: –	REV: A
CONTRACTOR: –			